Part Quality Inspection Application: Automated Resonant Inspection System Drop Test Fixture

NDT-DTF3

Drop Test Fixture

The Drop Test Fixture, Model NDT-DTF3 Resonant Inspection System, is an ideal choice for testing small metal injection molded (MIM), powder injection molded (PIM) or other small metal parts. The innovative Drop Test Fixture makes automation for 100% quality testing easy and efficient. With typical cycle times approximately 3 seconds per part, typical*, the NDT-DTF3 provides a means for objective sorting, requiring no human interpretation. A simple pass/fail result is returned by the NDT-RAM system and parts are automatically sorted via a servo-controlled motor.

The NDT-DTF3 automates easily with typical small part automation components like bowl feeders or vibratory tables and is instrumented with a laboratory grade force sensor, microphone and digital signal analyzer all designed to withstand a tough manufacturing environment. An industrial PC, mounted on a convienient swivel arm, provides software interface control.

This easy-to-use NDT system quickly becomes a critical quality assurance tool in your inspection process. The NDT-DTF3 system can detect imperfections or flaws such as variations in overall geometry, cracks, missing features and density of parts. It can also detect if processes have been missed, such as a machining or heat treating operation.

Typical Uses

- Production - End-of-Line Inspection
- Production - Process Monitor
- Field Service - Troubleshooting
- Quality Control - Spot Checking
- Engineering - Development

Successful Applications

- Metal Injection Molding (MIM)
- Powdered Injection Molding (PIM)
- Powdered Metal
- Brazing
- Small Metal Parts
- Ceramics
- Composites
- Stampings
- Pressurized Containers

Benefits

- Speed: Approximately 3 seconds per part, typical*
- Versatility: Tests many different parts on a single system
- Ease of use: No part preparation, elaborate fixturing or magnetizing required
- Easy-to-learn and use application software
- No human interpretation needed
- Generates production reports with statistical analysis
- Industrial packaging for reliable factory operation
- Eliminates or reduces false failures
- Provides four access levels of security
- Ensures the confidence of knowing that every part is 100% QA tested
- Light tower for visual pass/fail indication
- Effective for parts up to 5 inches (12.7 cm) and approximately 0.45 pound (200 g)

"Simplifying with Smart Sensing Solutions"

THE MODAL SHOP INC.

A PCB GROUP CO.

Helping you test, model, and modify the behavior of structures and processes.

3149 E. Kemper Road
Cincinnati, Ohio
45241 USA

Ph. **513-351-9919**
FAX **513-458-2172**
1-800-860-4867
www.modalshop.com
www.ndt-ram.com

NDT-DTF3

Drop Test Fixture

THE MODAL SHOP INC.

A PCB GROUP CO.

NDT-DTF3 Software Graphical User Interface

NDT-RAM Software Showing Resonant Frequencies and Sort Results

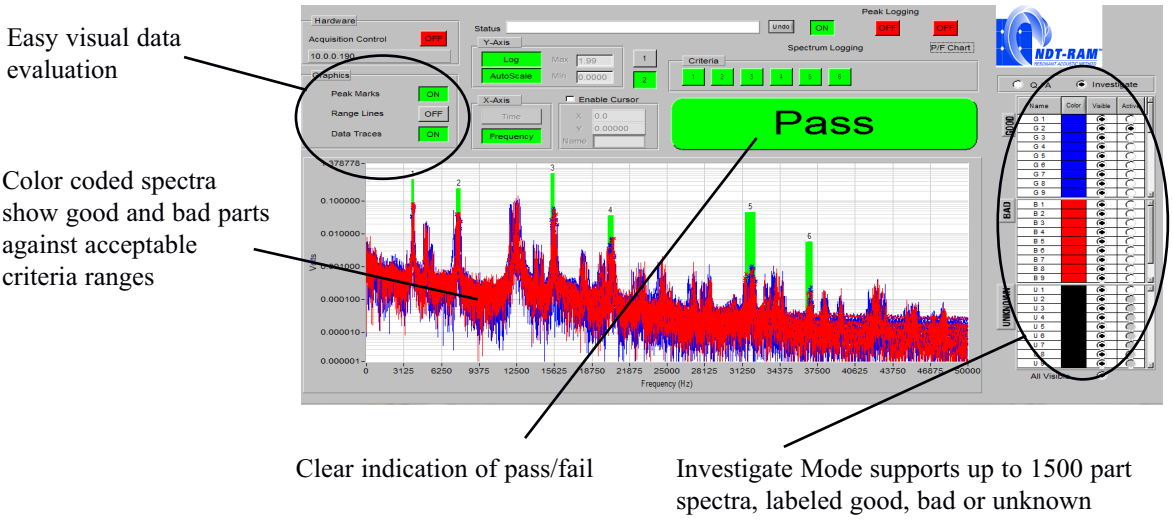

NDT-RAM application software compares each part's resonant signature against reference criteria limits and accepts or rejects the part accordingly. The system report generation feature allows for full part signature archival and statistical analysis of your parts and manufacturing processes.

The NDT-RAM Drop Test Fixture is automated, requiring no user intervention during testing, for efficient and cost effective 100% part testing. Integrating an industrial PC, free standing Drop Test Fixture, 2-channel smart digital controller, force sensor and microphone, this turnkey system is designed to withstand continuous operation in plant floor environments.

A light tower status indicator provides prominent visual display of passed or failed parts, indicating a system fault or providing warning that a preset number of parts have failed consecutively. Also, the NDT-DTF3 system can be integrated with third party bowl feeders or other automatic part feed mechanisms in the existing production line to support fully automated part handling and sort.

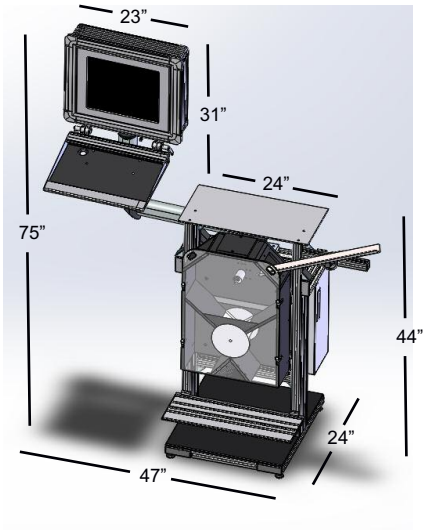

Part Throughput	
Drop test rate control	Adjustable to your feedrate
Cycle time (typical)	approximately 3 seconds per part, typical*
Maximum part size	5 inches (12.7 cm)
Pass/Fail Mechanism	
User defined criteria ranges	Up to 20 frequency bands
Rejection/Approval mechanics	Servo-Controlled motor
Acoustic Measurement	
Response sensing	Prepolarized microphone - PCB 130 series
Frequency range	Up to 50 kHz
System Control	
PLC Servo controller	16 inputs/16 outputs modular expandable
Computer	Industrial PC

*Part throughput rate dependent upon part size, data acquisition set-up parameters, and other part handling considerations

Helping you test, model, and modify the behavior of structures and processes.

3149 E. Kemper Road
Cincinnati, Ohio
45241 USA

Ph. **513-351-9919**
FAX **513-458-2172**
1-800-860-4867
www.modalshop.com
www.ndt-ram.com

In the interest of constant product improvement, specifications are subject to change without notice.
NDT-RAM and LanSharc are trademarks of The Modal Shop, Inc.